1 -Comp. Loc.: Engine

- ⇒ “1.1 1.8L AWM, AUG, AEB, ATW Overview”, page 3
- ⇒ “1.2 2.8L AHA, ATQ Overview”, page 7
- ⇒ “1.3 4.0L BDP Overview ”, page 13
- ⇒ “1.4 2.0L TDI BHW Overview ”, page 20
- ⇒ “1.5 Exhaust System ”, page 25
- ⇒ “1.6 Cooling Fans and Pumps Overview ”, page 29
- ⇒ “1.7 EVAP System ”, page 31
- ⇒ “1.8 Fuel Pump and Sensors Overview ”, page 32
- ⇒ “1.9 Accelerator Pedal Module Overview ”, page 34

Oil pressure switch -F1-	Mass air flow sensor -G70-	Engine coolant temperature sensor -G62- / Engine coolant temperature gauge sensor -G2-	Knock sensor 2 -G66-	Camshaft position sensor -G40-
◆ 1.8L AWM, AUG, AEB, ATW ⇒ page 6 ◆ 2.8L AHA, ATQ ⇒ page 12 ◆ 4.0L BDP 2.8L AHA, ATQ ⇒ page 12	◆ 1.8L AWM, AUG, AEB, ATW ⇒ Item 27 (page 5) ◆ 2.8L AHA, ATQ ⇒ Item 15 (page 8) ◆ 4.0L BDP ⇒ Item 15 (page 14) ◆ 2.0L TDI BHW ⇒ Item 15 (page 21)	◆ 2.8L AHA, ATQ ⇒ page 11 ◆ 2.0L TDI BHW ⇒ page 25 ◆ 4.0L BDP ⇒ page 20	◆ 1.8L AWM, AUG, AEB, ATW ⇒ Item 19 (page 4) ◆ 2.8L AHA, ATQ ⇒ page 10 ◆ 4.0L BDP ⇒ Item 6 (page 17)	◆ 1.8L AWM, AUG, AEB, ATW ⇒ Item 22 (page 5) ◆ 2.8L AHA, ATQ ⇒ page 10 ◆ 4.0L BDP ⇒ Item 3 (page 17) ◆ 2.0L TDI BHW ⇒ page 20

Protected by copyright. Copyright by Volkswagen AG. Volkswagen AG does not guarantee or accept any liability with respect to the correctness of information in this document. Copyright by Volkswagen AG. Reproduction, in part or in whole, is not permitted unless authorized by Volkswagen AG.

Camshaft position sensor 2 -G163- ◆ 2.8L AHA, ATQ ⇒ page 11 ◆ 4.0L BDP ⇒ Item 3 (page 17)	Throttle valve control module -J338- ◆ 1.8L AWM, AUG, AEB, ATW ⇒ Item 7 (page 4) ◆ 2.8L AHA, ATQ ⇒ Item 16 (page 9) ◆ 4.0L BDP ⇒ Item 3 (page 15)	Speedometer vehicle speed sensor -G22- ◆ 1.8L AWM, AUG, AEB, ATW ⇒ page 12 ◆ 2.8L AHA, ATQ ⇒ page 12 ◆ 4.0L BDP ⇒ page 12 ◆ 2.0L TDI BHW ⇒ page 12	EVAP canister purge regulator valve 1 -N80- ◆ 1.8L AWM, AUG, AEB, ATW ⇒ Item 29 (page 5) ◆ 2.8L AHA, ATQ ⇒ Item 18 (page 9)	Fuel Injectors ◆ Cylinder 1 fuel injector -N30- ◆ Cylinder 2 fuel injector -N31- ◆ Cylinder 3 fuel injector -N32- ◆ Cylinder 4 fuel injector -N33- ◆ Cylinder 5 fuel injector -N83- ◆ Cylinder 6 fuel injector -N84- ◆ Cylinder 7 fuel injector -N85- ◆ Cylinder 8 fuel injector -N86- ◆ 1.8L AWM, AUG, AEB, ATW ⇒ Item 23 (page 5) ◆ 4.0L BDP ⇒ Item 9 (page 16)
Oil level thermal sensor -G266- ◆ 1.8L AWM, AUG, AEB, ATW ⇒ page 6 ◆ 2.8L AHA, ATQ ⇒ page 13 ◆ 4.0L BDP 2.8L AHA, ATQ ⇒ page 13	Camshaft adjustment valve 1 -N205- ◆ 1.8L AWM, AUG, AEB, ATW ⇒ page 5 ◆ 2.8L AHA, ATQ ⇒ page 11 ◆ 4.0L BDP ⇒ page 20	Engine speed sensor -G28- ◆ 1.8L AWM, AUG, AEB, ATW ⇒ Item 17 (page 4) ◆ 2.8L AHA, ATQ ⇒ page 12 ◆ 4.0L BDP ⇒ page 19 ◆ 2.0L TDI BHW ⇒ page 12	Camshaft adjustment valve 2 -N208- ◆ 2.8L AHA, ATQ ⇒ page 11 ◆ 4.0L BDP ⇒ page 19	Ignition coils with power output stage ◆ Ignition coil 1 -N70- ◆ Ignition coil 2 -N127- ◆ Ignition coil 3 -N291- ◆ Ignition coil 4 -N292- ◆ Ignition coil 5 -N323- ◆ Ignition coil 6 -N324- ◆ Ignition coil 7 -N325- ◆ Ignition coil 8 -N326- ◆ 1.8L AWM, AUG, AEB, ATW ⇒ Item 24 (page 5) ◆ 4.0L BDP ⇒ Item 9 (page 17)

Protected by copyright. Copying for private or commercial purposes, in part or in whole, is not permitted unless authorised by Volkswagen AG. Volkswagen AG does not guarantee or accept any liability with respect to the correctness of information in this document. Copyright by Volkswagen AG.

Knock sensor 1 -G61- ◆ 1.8L AWM, AUG, AEB, ATW ⇒ Item 20 (page 5) ◆ 2.8L AHA, ATQ ⇒ page 10 ◆ 4.0L BDP ⇒ Item 6 (page 17)	Intake air temperature sensor -G42- / Intake air temperature sensor -G72- (2.0 TDI has G31 integrated in G42) ◆ 1.8L AWM, AUG, AEB, ATW ⇒ Item 16 (page 4) ◆ 2.8L AHA, ATQ ⇒ Item 10 (page 9) ◆ 2.0L TDI BHW ⇒ Item 9 (page 24)			

1.1 1.8L AWM, AUG, AEB, ATW Overview

Protected by copyright. Copying for private or commercial purposes, in part or in whole, is not permitted unless authorised by Volkswagen AG. Copyright by Volkswagen AG. Volkswagen AG does not guarantee or accept any liability with respect to the correctness of information in this document.

d by Volkswagen AG. Volkswagen AG does not gu
vate or commercial purposes, in part or in whole, is not permit

2 - Heated oxygen sensor -G39- ⇒ page 25

3 - Oxygen sensor after three way catalytic converter -G130- ⇒ page 25

4 - Engine coolant temperature sensor -G62-
- ❑ In water neck on rear of cylinder head

5 - Turbocharger recirculation valve -N249- ⇒ page 7

6 - Secondary air injection solenoid valve -N112- ⇒ page 7

7 - Throttle valve control module -J338-

8 - Clutch pedal switch -F36-
- ❑ In driver-side footwell

8 - Brake lamp switch -F- ⇒ page 34
- ❑ In driver-side footwell

8 - Brake pedal switch -F47- ⇒ page 34
- ❑ In driver-side footwell

8 - Throttle position sensor -G79- ⇒ page 34
- ❑ In driver-side footwell

8 - Accelerator pedal position sensor 2 -G185- ⇒ page 34
- ❑ In driver-side footwell

9 - 4-Pin Harness Connector - Brown for Oxygen sensor after three way catalytic converter -G130-

10 - 6-Pin Harness Connector - Black for Heated oxygen sensor -G39-

11 - 3-Pin Harness Connector - Gray for Engine speed sensor -G28-

12 - 3-Pin Harness Connector - Green for Knock sensor 1 -G61-

13 - 3-Pin Harness Connector - Blue for Knock sensor 2 -G66-

14 - Secondary air injection pump relay -J299-

15 - Motronic engine control module -J220-

16 - Intake air temperature sensor -G42-

17 - Engine speed sensor -G28-
- ❑ On Driver side of engine block at transmission flange

18 - Charge air pressure sensor -G31-

19 - Knock sensor 2 -G66-
- ❑ On Driver side of engine block

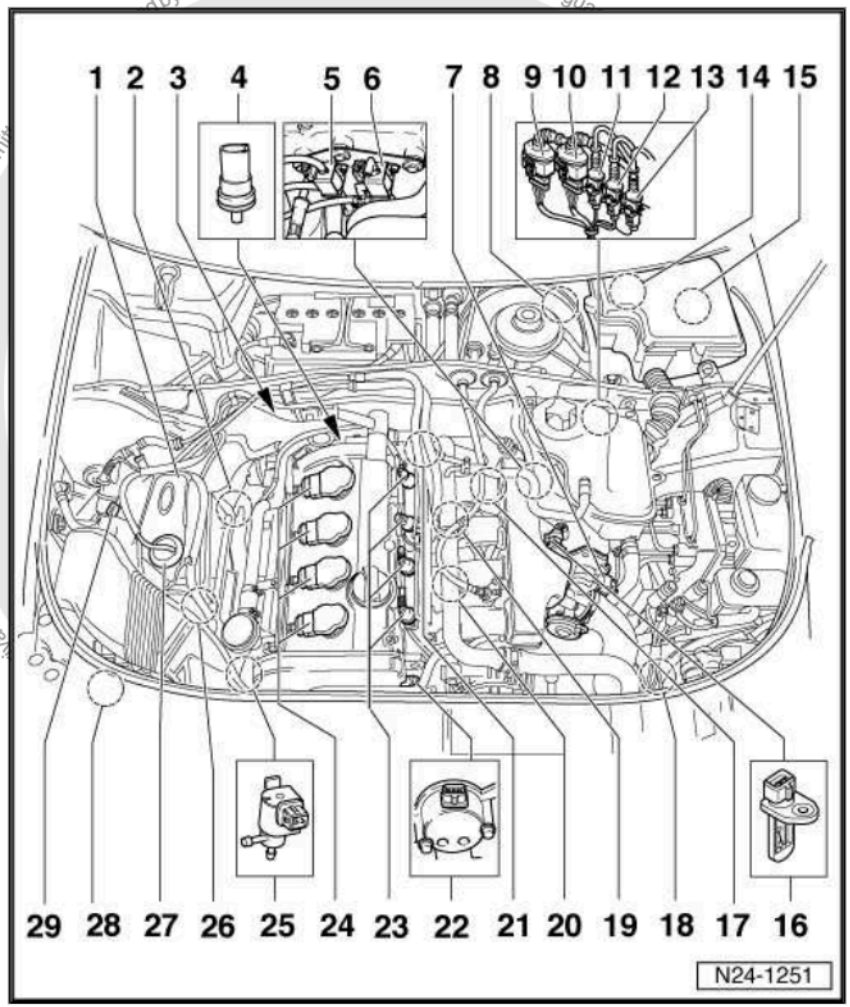

20 - Knock sensor 1 -G61-
- ❑ On Driver side of engine block

21 - Fuel Pressure Regulator

22 - Camshaft position sensor -G40-

23 - Fuel Injectors

24 - Ignition Coils

25 - Wastegate bypass regulator valve -N75-

26 - Ground Connection

27 - Mass air flow sensor -G70-
- ❑ In air inlet from air filter housing

28 - Secondary air injection pump motor -V101- → page 7
- ❑ Forward of right front tire, behind fender liner

29 - EVAP canister purge regulator valve 1 -N80-

Protected by copyright. Copying for private or commercial purposes, in part or in whole, is not permitted unless authorised by Volkswagen AG. Volkswagen AG does not guarantee or accept any liability with respect to the correctness of information in this document. Copyright by Volkswagen AG.

1.1.1 Camshaft Adjuster

- - Camshaft adjustment valve 1 -N205-
- - mounted on the rear of the cylinder head

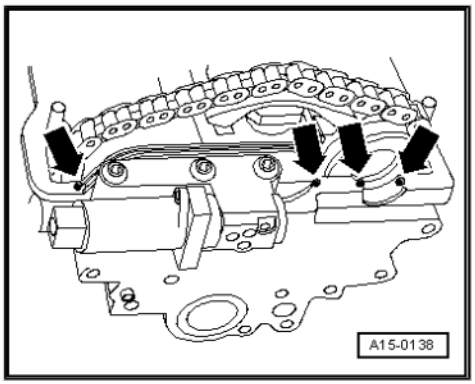

1.1.2 Oil Level Thermal Sensor

- - Oil level thermal sensor -G266-
- - At engine oil pan

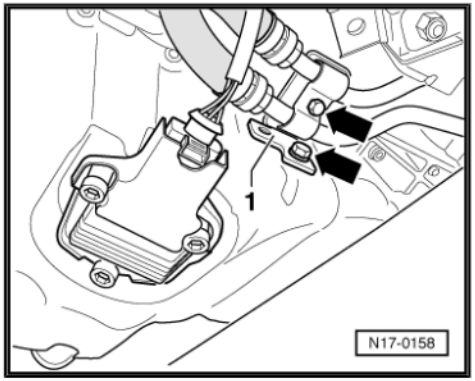

1.1.3 Oil Pressure Switch

16 - Oil pressure switch -F1-

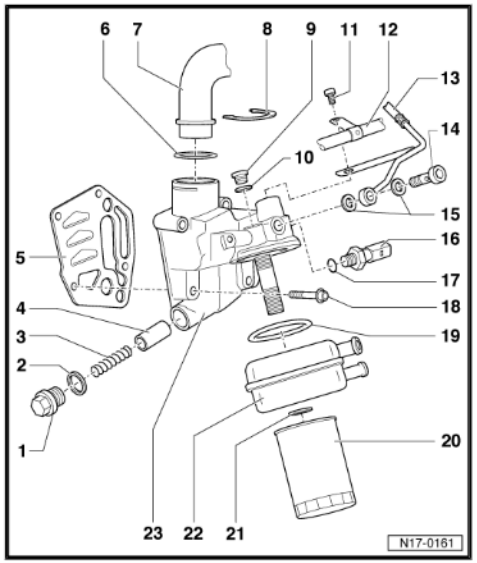

Protected by copyright. Copying for private or commercial purposes, in part or in whole, is not permitted unless authorised by Volkswagen AG. Volkswagen AG does not guarantee or accept any liability with respect to the correctness of information in this document. Copyright by Volkswagen AG.

1.1.4 Secondary Air Injection

7 - TO Turbocharger recirculation valve -N249-

10 - Secondary air injection solenoid valve -N112-

17 - Secondary air injection pump motor -V101-

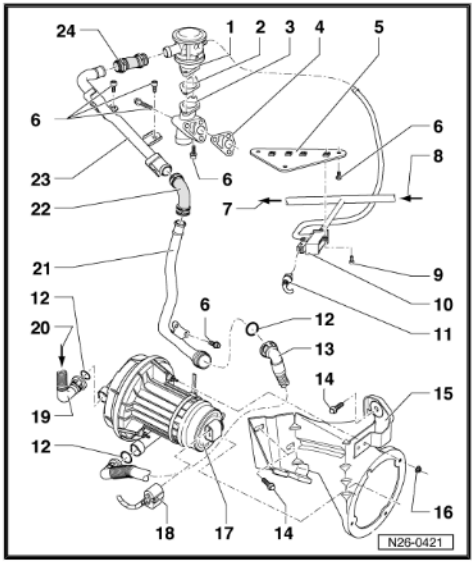

1.1.5

1.2 2.8L AHA, ATQ Overview

1.2.1 Mass Air Flow Sensor

Protected by copyright. Copying for private or commercial purposes, in part or in whole, is not permitted unless authorised by Volkswagen AG. Volkswagen AG does not guarantee or accept any liability with respect to the correctness of information in this document. Copyright by Volkswagen AG.

15 - Mass air flow sensor -G70-

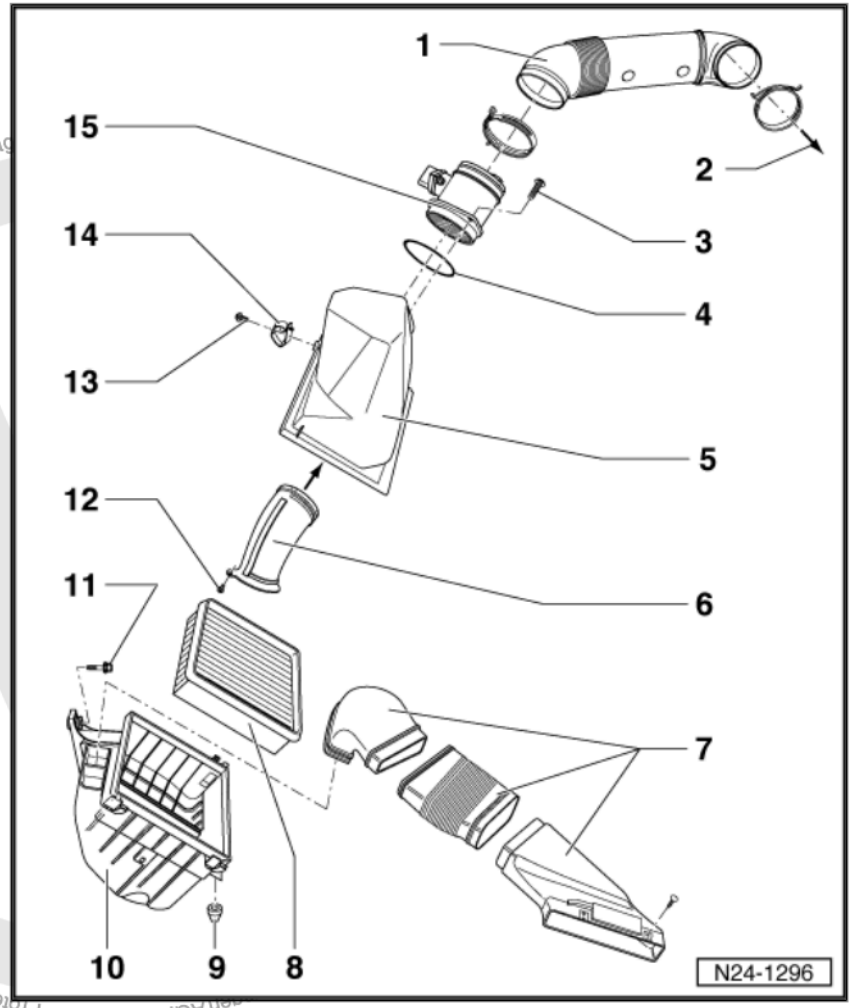

Protected by copyright. Copying for private or commercial purposes, in part or in whole, is not permitted unless authorised by Volkswagen AG.

1.2.2 Intake Manifold Overview

10 - Intake air temperature sensor -G42-

10 - Intake air temperature sensor -G72-

16 - Throttle valve control module -J338-

18 - EVAP canister purge regulator valve 1 -N80-

19 - Leak detection pump -V144-

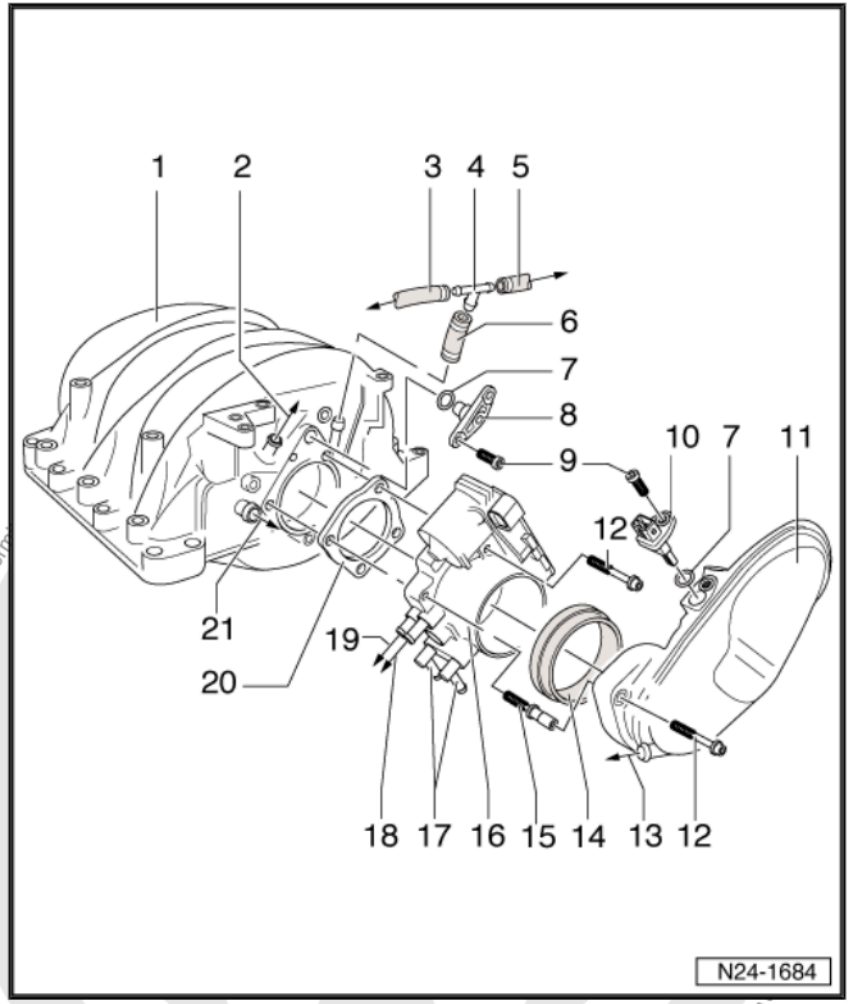

Protected by copyright. Copying for private or commercial purposes, in part or in whole, is not permitted. This document. Copyright by Volkswagen AG.

1.2.3 Rear of Intake Manifold

3 - Secondary air injection solenoid valve -N112- , (Vehicles with secondary air injection system)

7 - Intake manifold tuning valve -N156-

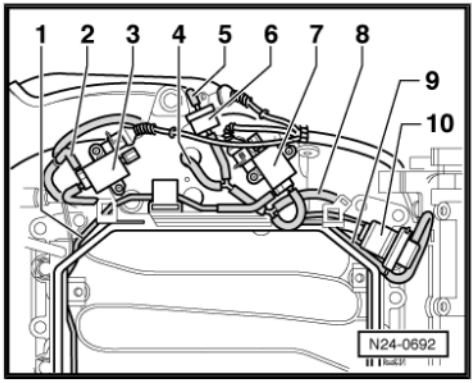

1.2.4 Ignition Assembly

6 - Ignition coil -N152-

10 - Knock sensor 2 -G66-

11 - Knock sensor 1 -G61-

13 - Camshaft position sensor 2 -G163-

18 - Camshaft position sensor -G40-

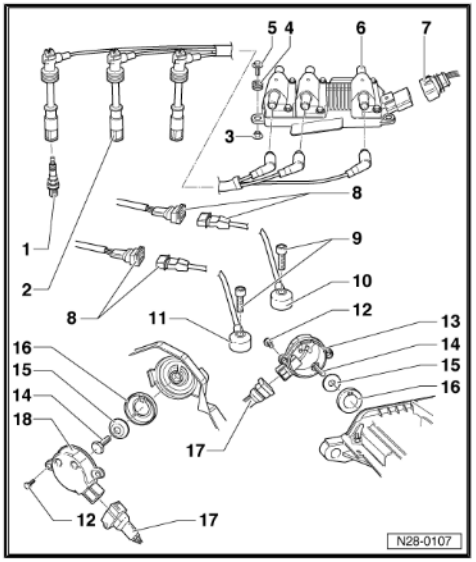

Protected by copyright. Copying for private or commercial purposes, in part or in whole, is not permitted unless authorised by Volkswagen AG. Volkswagen AG does not guarantee or accept any liability with respect to the correctness of information in this document. Copyright by Volkswagen AG.

1.2.5 Valvetrain Assembly

4 - Exhaust Camshaft

7 - Intake Camshaft

11 - Camshaft adjustment valve 1 -N205-

11 - Camshaft adjustment valve 2 -N208-

27 - Camshaft position sensor -G40-

27 - Camshaft position sensor 2 -G163-

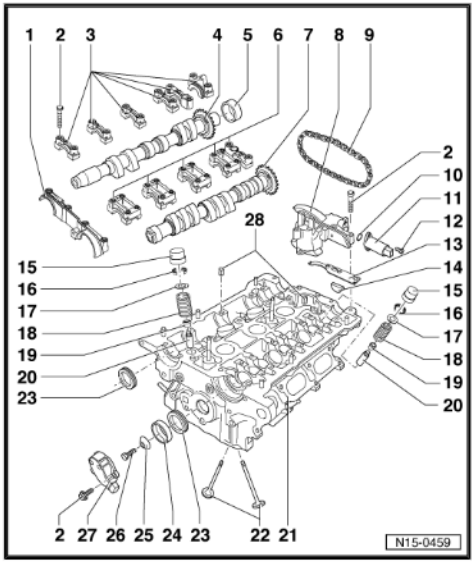

1.2.6 Cooling System, engine side

7 - Engine coolant temperature sensor -G62-

7 - Engine coolant temperature gauge sensor -G2-

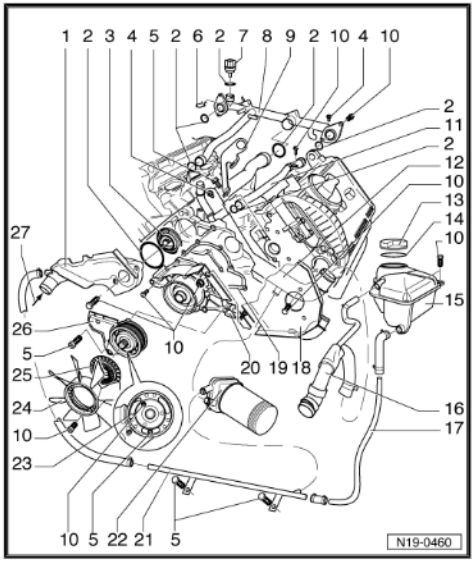

Protected by copyright. Copying for private or commercial purposes, in part or in whole, is not permitted unless authorised by Volkswagen AG. Volkswagen AG does not guarantee or accept any liability with respect to the correctness of information in this document. Copyright by Volkswagen AG.

1.2.7 Oil Pressure Switch

10 - Oil pressure switch -F1-

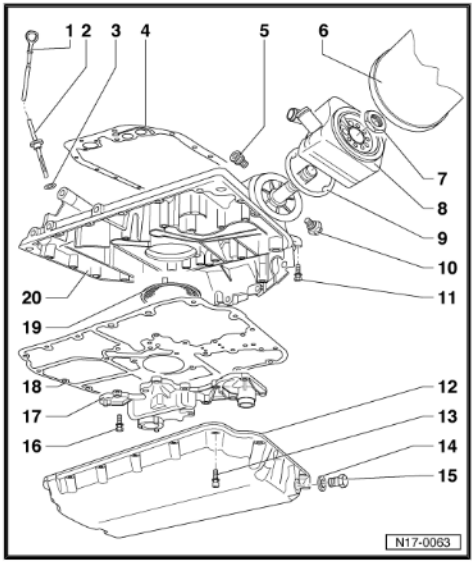

1.2.8 Engine Speed Sensor

A - Speedometer vehicle speed sensor -G22-

B - Engine speed sensor -G28-

- - At left side of engine and transmission flange

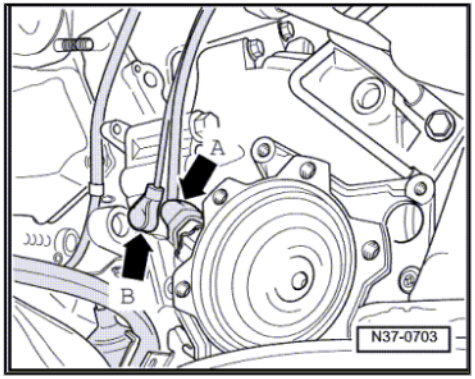

Protected by copyright. Copying for private or commercial purposes, in part or in whole, is not permitted unless authorised by Volkswagen AG. Volkswagen AG does not guarantee or accept any liability with respect to the correctness of information in this document. Copyright by Volkswagen AG.

1.2.9 Oil Level Thermal Sensor

1 - Oil level thermal sensor -G266-

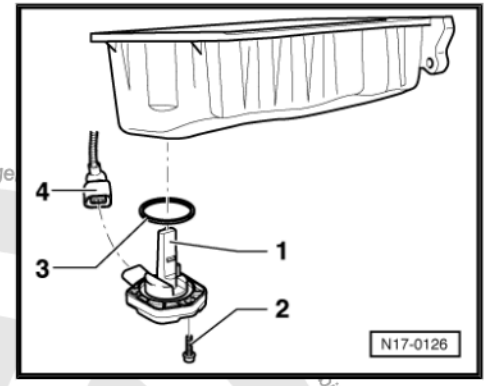

1.3 4.0L BDP Overview

1.3.1 Mass Air Flow Sensor

Protected by copyright. Copying for private or commercial purposes, in part or in whole, is not permitted unless authorised by Volkswagen AG. Volkswagen AG. Copyright by Volkswagen AG. ility with respect to the correctness of information in this document.

15 - Mass air flow sensor -G70-

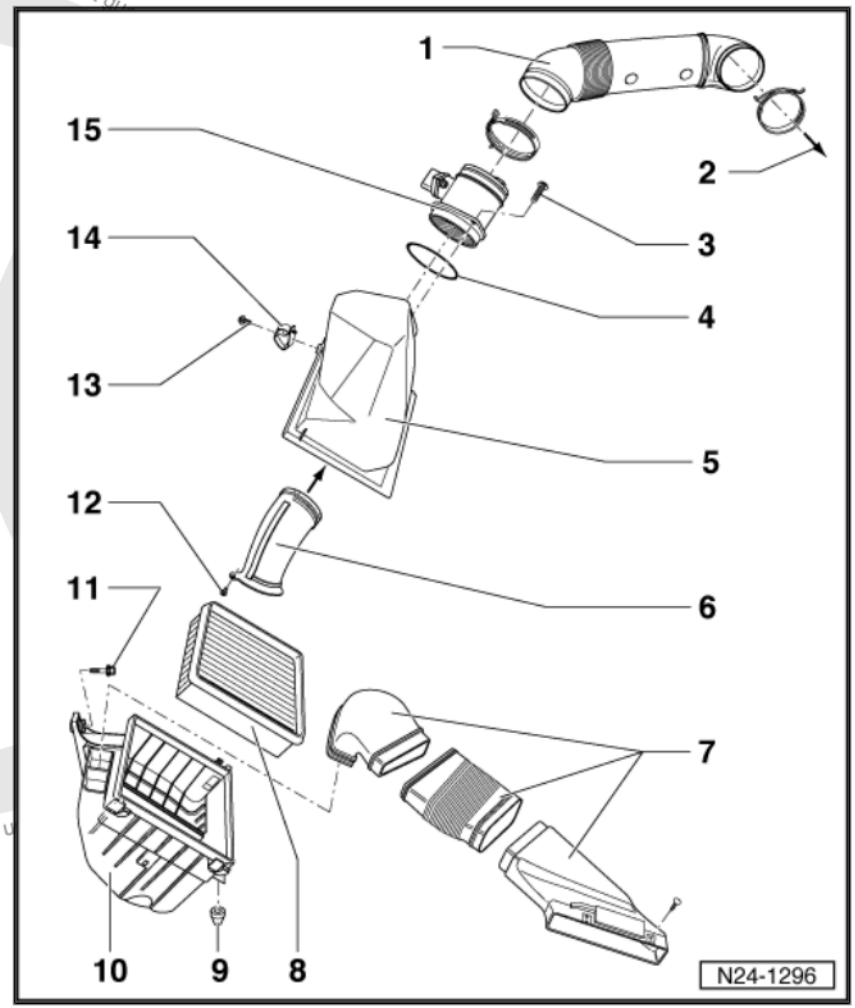

Protected by copyright. Copying for private or commercial purposes, in part or in whole, is not permitted unless authorised by Volkswagen AG. Volkswagen AG does not guarantee

1.3.2 Intake Manifold

3 - Throttle valve control module -J338-

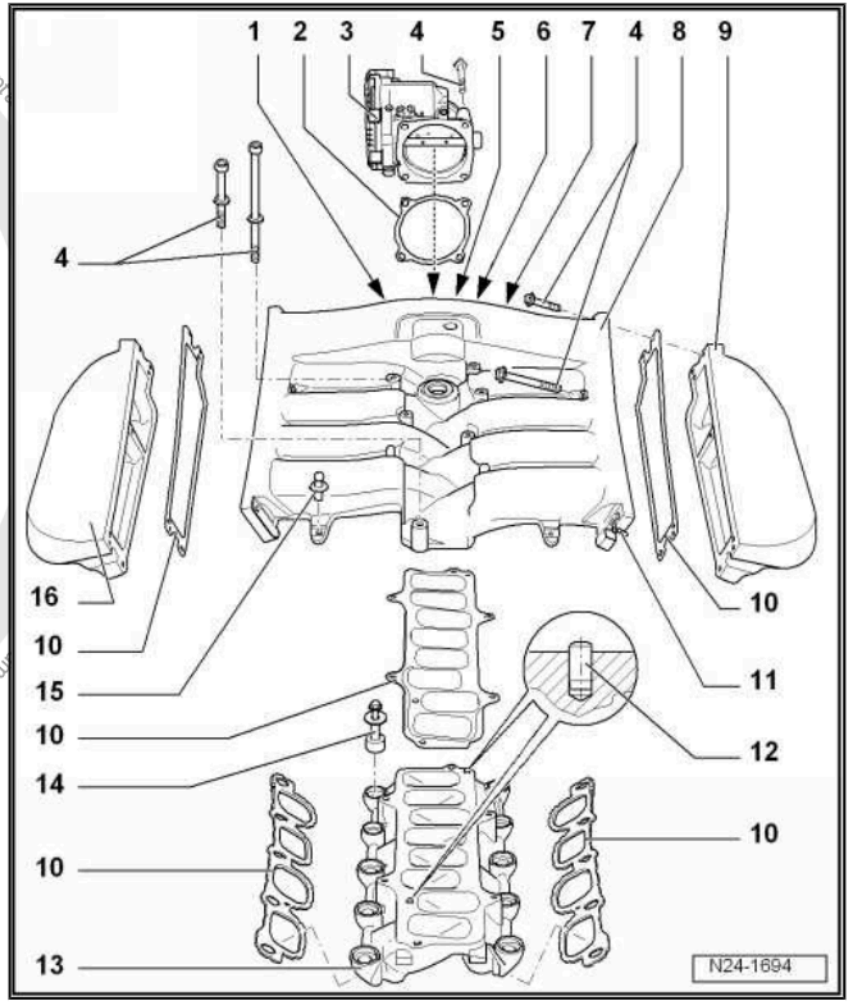

Protected by copyright. Copying for private or commercial purposes, in part or in whole, is not permitted unless authorised by Volkswagen AG. Volkswagen AG does not guarantee or accept any liability with respect to the correctness of information. Copyright by Volkswagen AG.

1.3.3 Fuel Rail

1 - Fuel Distributor with Fuel Injectors
- ❑ Cylinder Bank 1

3 - Fuel Distributor with Fuel Injectors
- ❑ Cylinder Bank 2

9 - Fuel injectors

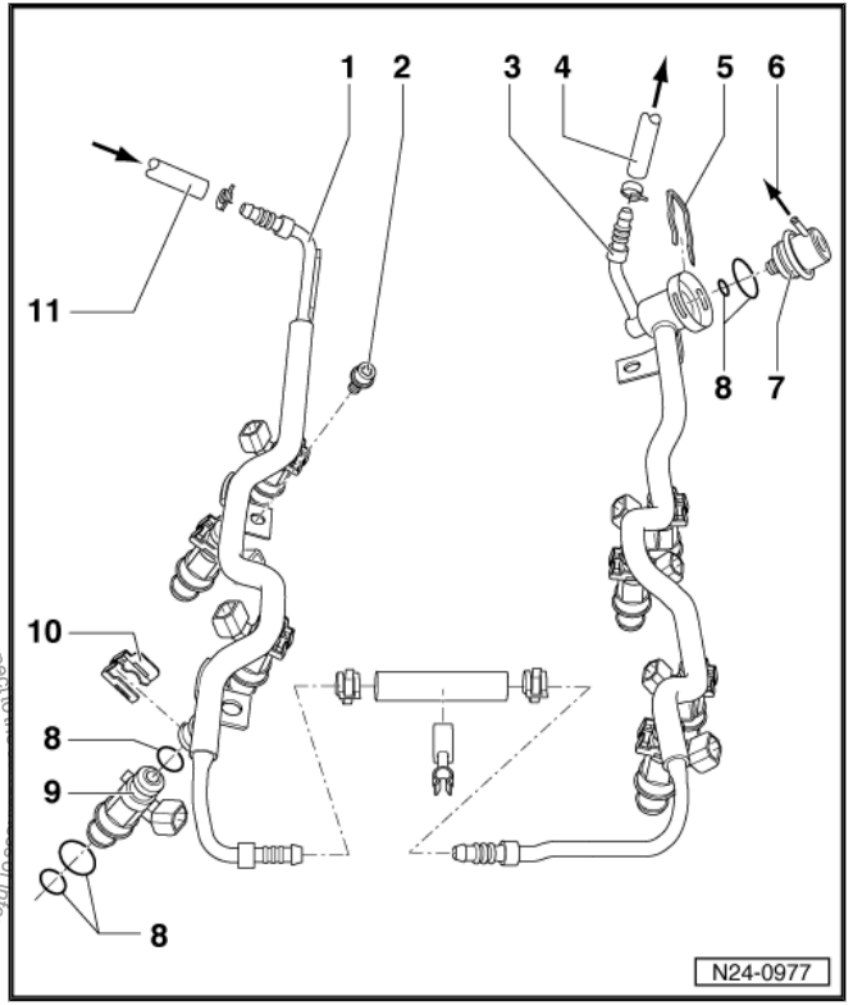

Protected by copyright. Copying for private or commercial purposes, in part or in whole, is not permitted unless authorised by Volkswagen AG. Volkswagen AG does not guarantee or accept any liability with respect to the accuracy of information in this document. Copyright by Volkswagen AG.

1.3.4 Ignition System

1 - Connector (coil on plug)

3 - Camshaft position sensor -G40- for exhaust camshaft
- ❑ Cylinder Bank 1

3 - Camshaft position sensor 3 -G300- for intake camshaft
- ❑ Cylinder Bank 1

3 - Camshaft position sensor 2 -G163- - for intake camshaft
- ❑ Cylinder Bank 2

3 - Camshaft position sensor 4 -G301- - for exhaust camshaft
- ❑ Cylinder Bank 2

6 - Knock sensor 1 -G61- ⇒ page 18

- Knock sensor 2 -G66- ⇒ page 18

- Knock sensor 3 -G198- ⇒ page 18

- Knock sensor 4 -G199- ⇒ page 18

9 - Ignition Coils with Power Output Stage

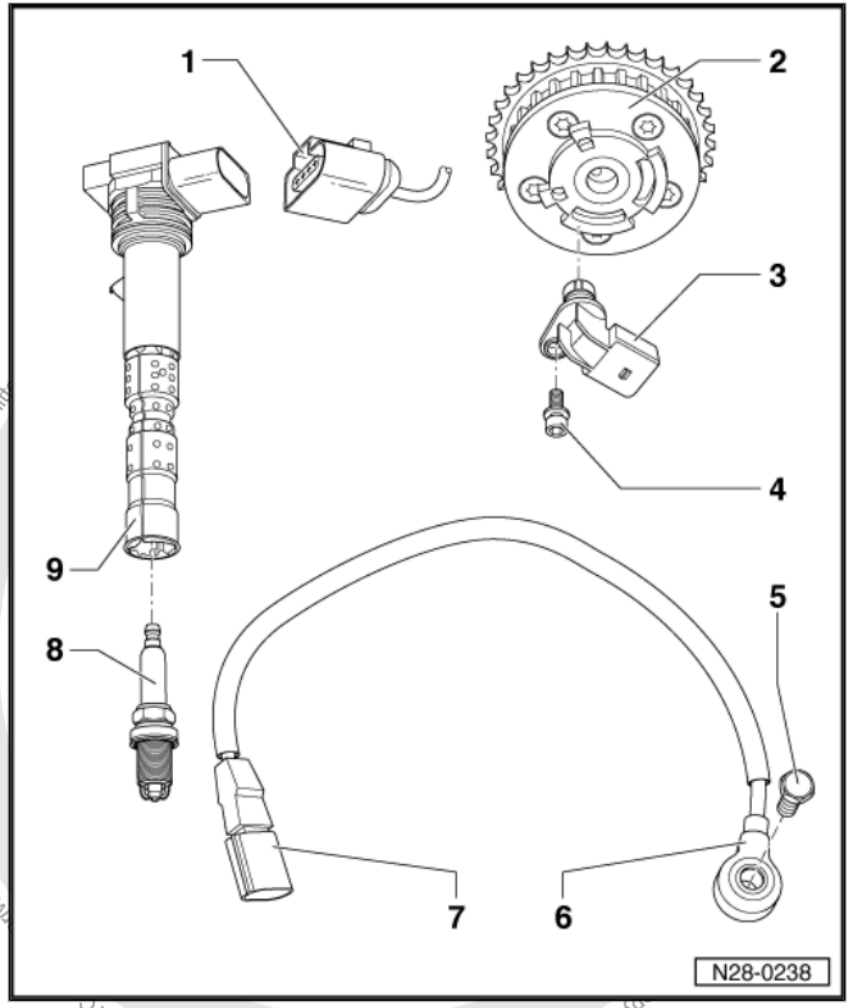

Protected by copyright. Copyright by Volkswagen AG. Private or commercial purposes, in part or in whole, is not permit

1.3.5 Knock Sensors, Bank 1

1 - Knock sensor 1 -G61- : for cylinder 1 and 2

2 - Knock sensor 2 -G66- : for cylinder 3 and 4

3 - Generator mount (generator removed).

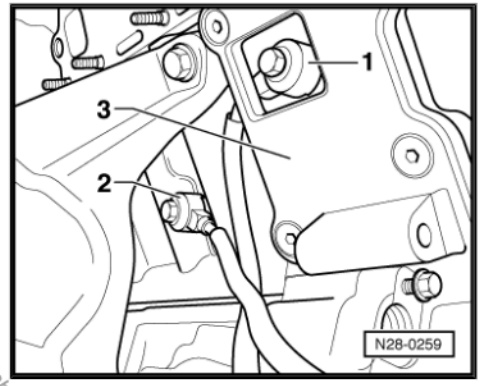

1.3.6 Knock Sensor 3, Bank 2

1 - Knock sensor 3 -G198- : for cylinder 5 and 6

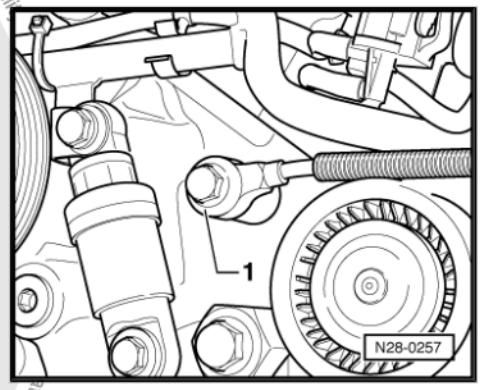

1.3.7 Knock Sensor 4, Bank 2

1 - Knock sensor 4 -G199- : for cylinder 7 and 8

2 - A/C compressor mount (compressor removed)

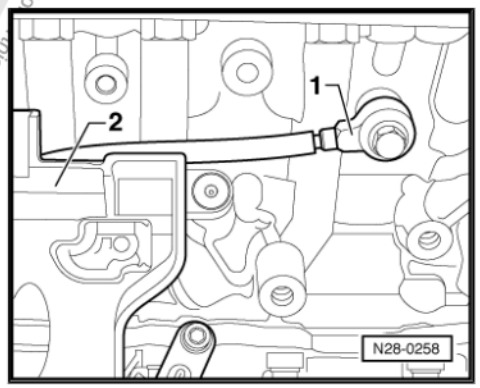

Protected by copyright. Copying for private or commercial purposes, in part or in whole, is not permitted unless authorised by Volkswagen AG. Volkswagen AG does not guarantee or accept any liability with respect to the correctness of information in this document. Copyright by Volkswagen AG.

1.3.8 Engine Speed Sensor

Arrow - Engine speed sensor -G28-

- - At left side of engine and transmission flange

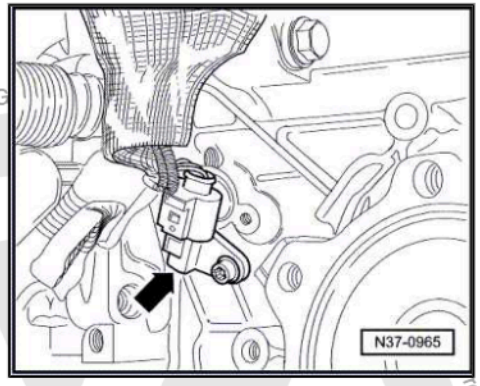

1.3.9 Camshaft Adjustment Valve, Bank 2

22 - Exhaust camshaft adjustment valve 2 -N319-

23 - Camshaft adjustment valve 2 -N208-

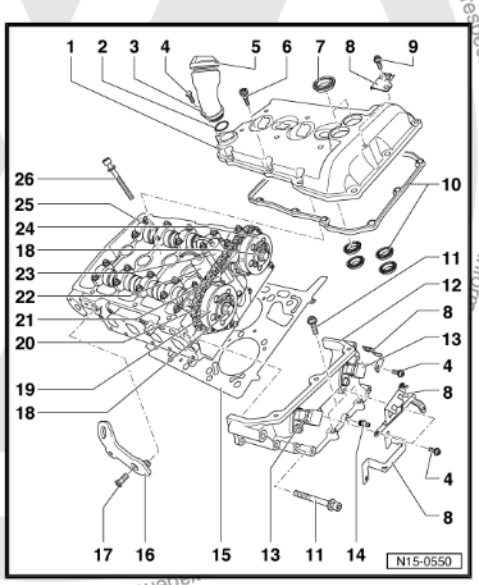

Protected by copyright. Copying for private or commercial purposes, in part or in whole, is not permitted unless authorised by Volkswagen AG. Volkswagen AG

Protected by copyright. Copying for private or commercial purposes, in part or in whole, is not permitted unless authorised by Volkswagen AG. Volkswagen AG does not guarantee or accept any liability with respect to the correctness of information in this document. Copyright by Volkswagen AG.

1.3.10 Camshaft Adjustment Valve, Bank 1

19 - Camshaft adjustment valve 1 -N205-

20 - Exhaust camshaft adjustment valve 1 -N318-

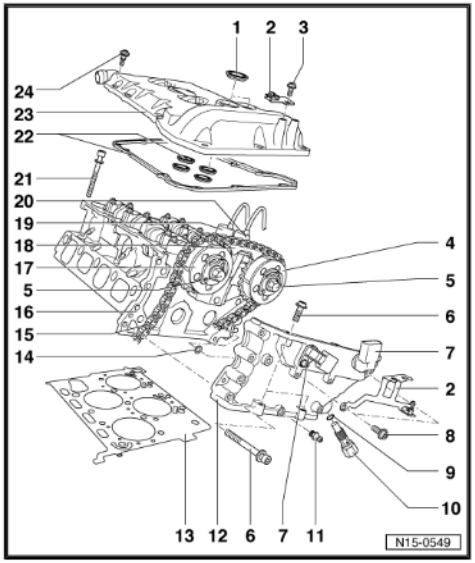

1.3.11 Engine Cooling System

13 - Engine coolant temperature sensor -G62-

22 - Water pump -V36-

23 - Coolant Thermostat Housing, with Map controlled engine cooling thermostat -F265-

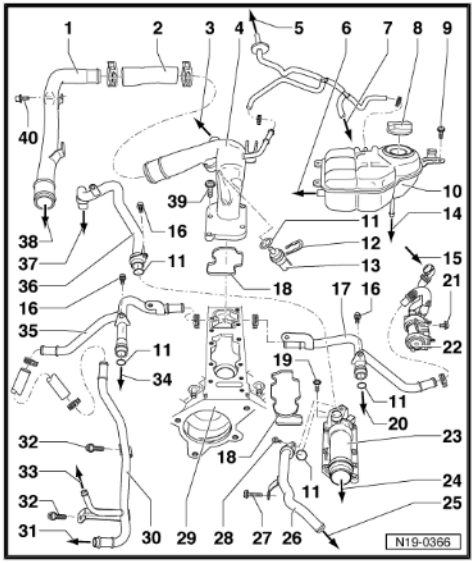

1.4 2.0L TDI BHW Overview

1.4.1 Mass Air Flow Sensor

15 - Mass air flow sensor -G70-

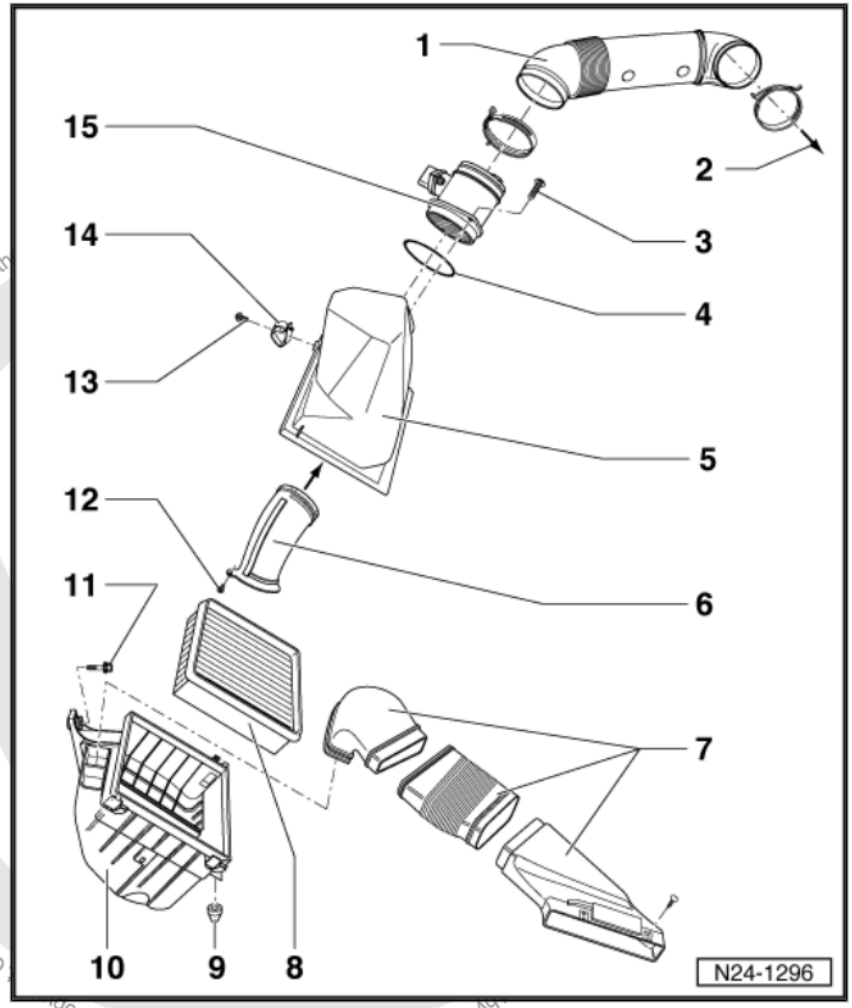

Protected by copyright. Copying for private or commercial purposes, in part or in whole, is not permitted unless authorised by Volkswagen AG.

1.4.2 Intake Manifold

1 - Intake flap motor -V157-

7 - EGR potentiometer -G212-

7 - EGR vacuum regulator solenoid valve -N18-

Protected by copyright. Copying for private or commercial purposes, in part or in whole, is not permitted unless authorised by Volkswagen AG. Volkswagen AG does not guarantee or accept any liability with respect to the correctness of information in this document. Copyright by Volkswagen AG.

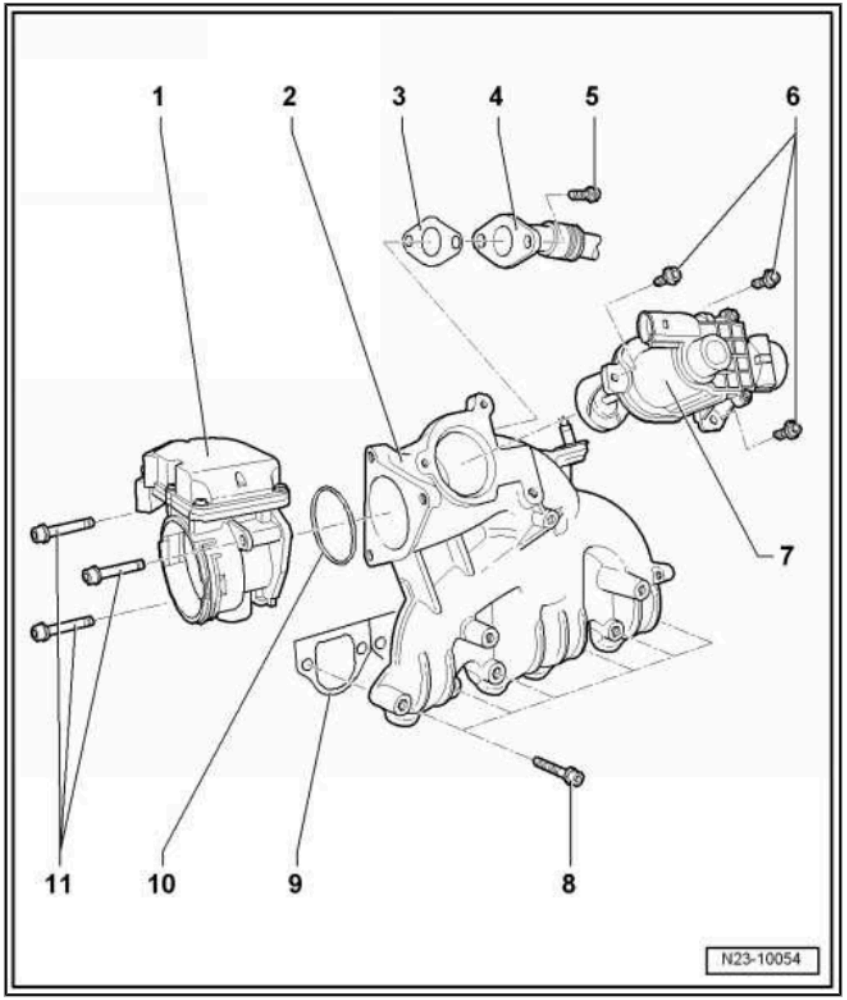

1.4.3 Turbocharger

1 - Turbocharger intake temperature sensor -G507-

4 - Intake flap motor -V157-

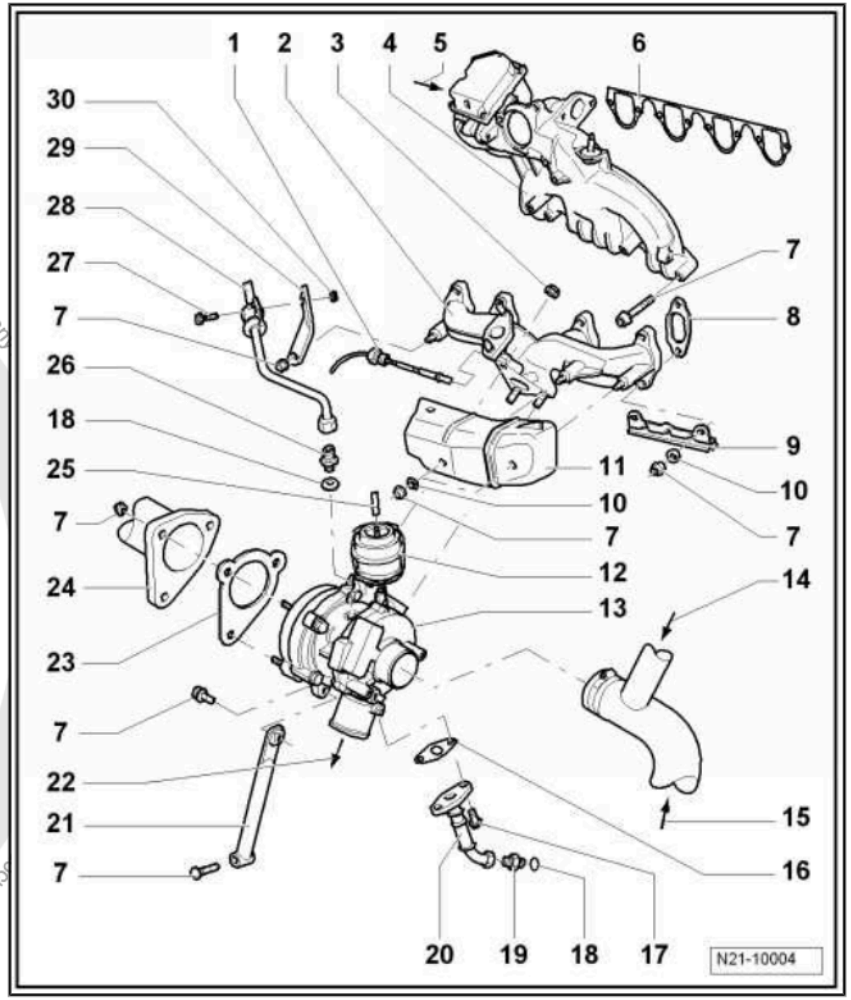

Protected by copyright. Copying for private or commercial purposes, in part or in whole, is not permitted unless authorised by Volkswagen AG. Volkswagen AG does not guarantee or accept any liability with respect to the correctness of information in this document. Copyright by Volkswagen AG.

1.4.4 Charge Air Cooler

1 - Charge air cooler

9 - Charge air pressure sensor -G31-

9 - Intake air temperature sensor -G42-

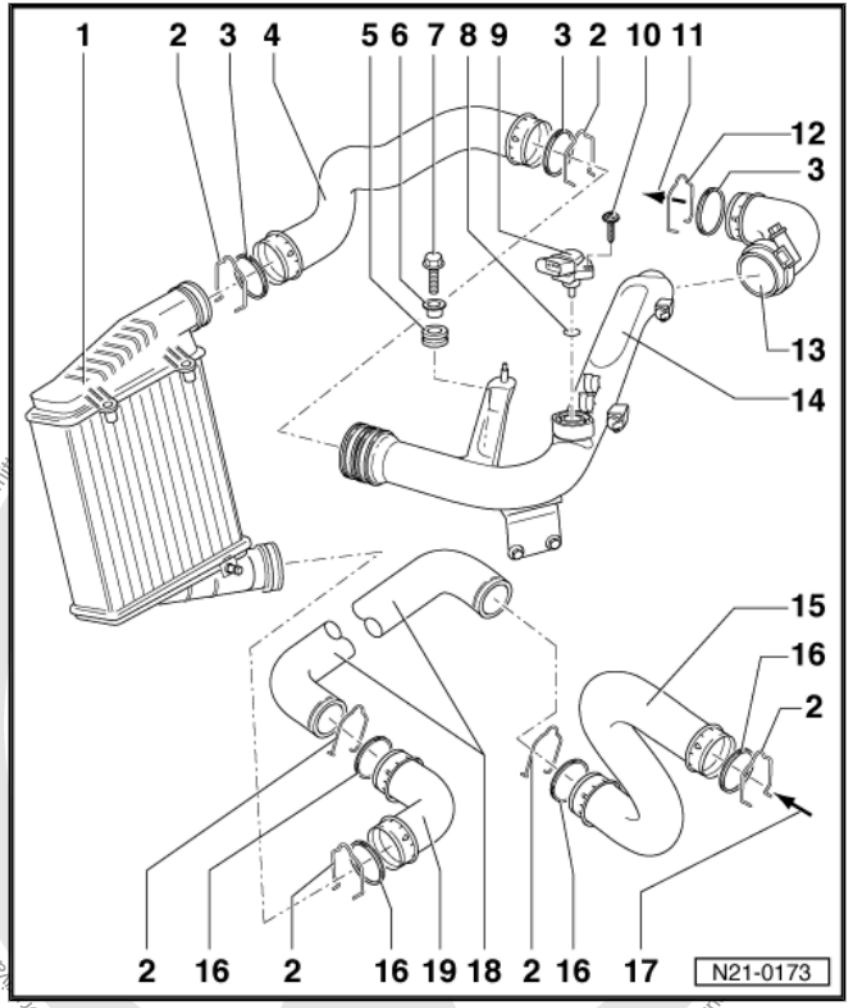

Protected by copyright. Copying for private or commercial purposes, in part or in whole, is not permitted. Copyright by Volkswagen AG.

1.4.5 Coolant Temperature (ECT) Sensor

6 - Engine coolant temperature sensor -G62-

6 - Engine coolant temperature gauge sensor -G2-

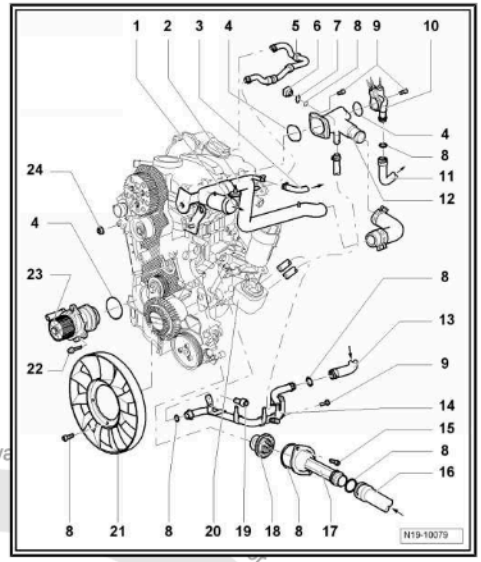

1.5 Exhaust System

- ⇒ “1.5.1 1.8L AWM, AUG, AEB, ATW Exhaust ”, page 25
- ⇒ “1.5.2 2.8L AHA, ATQ Exhaust ”, page 27
- ⇒ “1.5.3 4.0L BDP Exhaust ”, page 28
- ⇒ “1.5.4 2.0L TDI BHW Exhaust ”, page 29

1.5.1 1.8L AWM, AUG, AEB, ATW Exhaust

AWD shown

Protected by copyright. Copying for private or commercial purposes, in part or in whole, is not permitted unless authorised by Volkswagen AG. Volkswagen AG. Copyright by Volkswagen AG. accept any liability with respect to the correctness of information in this document.

4 - Heated oxygen sensor -G39-

6 - Oxygen sensor after three way catalytic converter -G130-

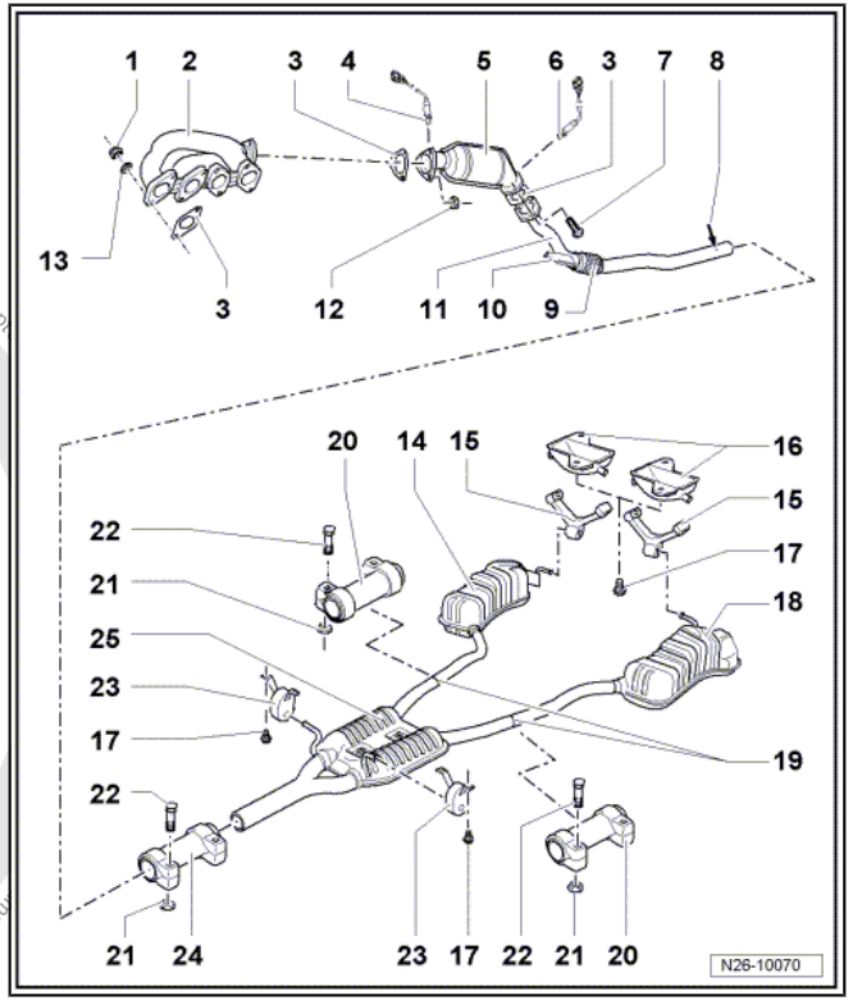

Protected by copyright. Copying for private or commercial purposes, in part or in whole, is not permitted unless authorised by Volkswagen AG. Volkswagen AG does not guarantee or accept any liability with respect to the correctness of information. Copyright by Volkswagen AG.

1.5.2 2.8L AHA, ATQ Exhaust

1 - Heated oxygen sensor -G39-
- For cylinder bank 1

4 - Oxygen sensor after three way catalytic converter -G130-
- For cylinder bank 1

11 - Oxygen sensor 2 after catalytic converter -G131-
- For cylinder bank 2

15 - Heated oxygen sensor 2 -G108-
- For cylinder bank 2

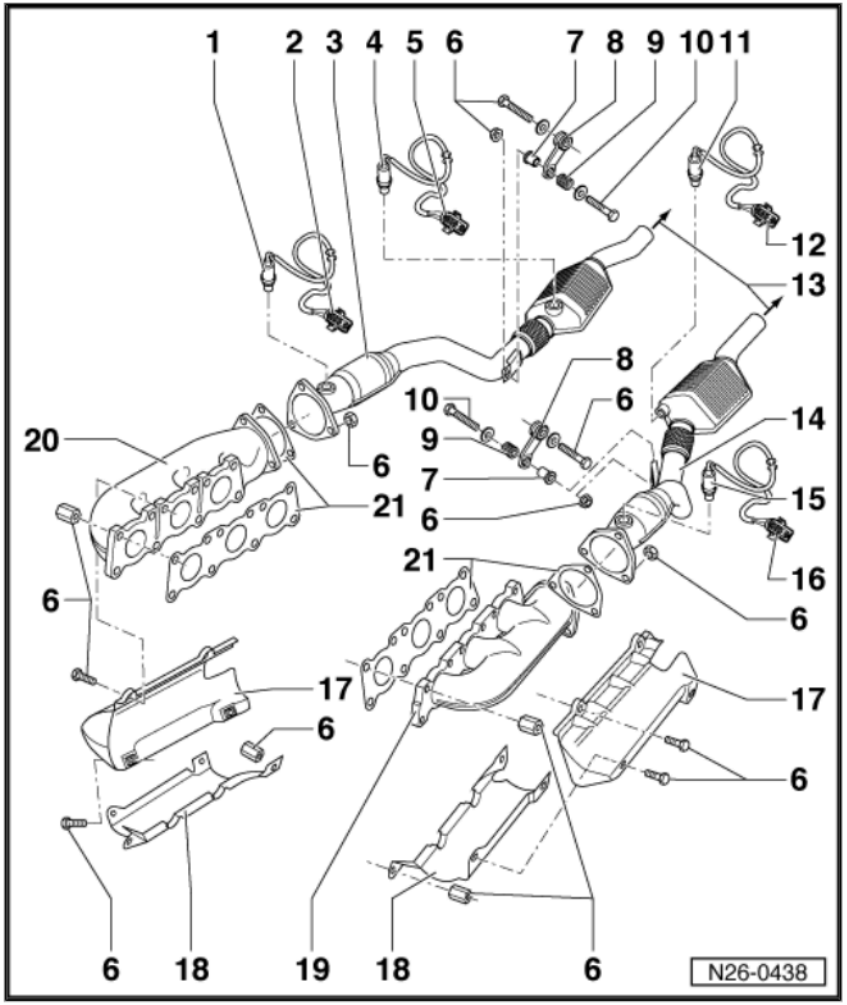

Protected by copyright. Copying for private or commercial purposes, in part or in whole, is not permitted unless authorised by Volkswagen AG. Volkswagen AG does not guarantee or accept any liability with respect to the correctness of information in this document. Copyright by Volkswagen AG.

1.5.3 4.0L BDP Exhaust

3 - Heated oxygen sensor -G39-
- For cylinder bank 1

6 - Oxygen sensor after three way catalytic converter -G130-
- For cylinder bank 1

9 - Heated oxygen sensor 2 -G108-
- For cylinder bank 2

10 - Oxygen sensor 2 after catalytic converter -G131-
- For cylinder bank 2

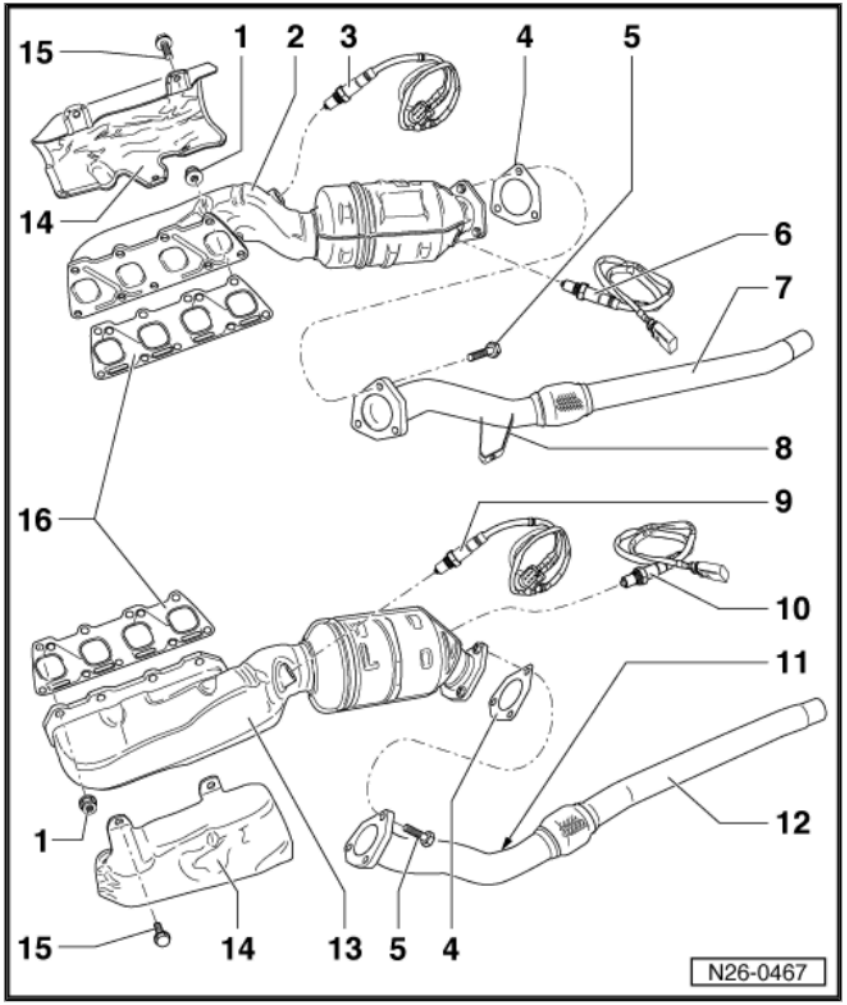

Protected by copyright. Copying for private or commercial purposes, in part or in whole, is not permitted unless authorised by Volkswagen AG. Volkswagen AG does not guarantee or accept any liability with respect to the correctness of information in this document. Copyright by Volkswagen AG.

1.5.4 2.0L TDI BHW Exhaust

3 - Heated oxygen sensor -G39-

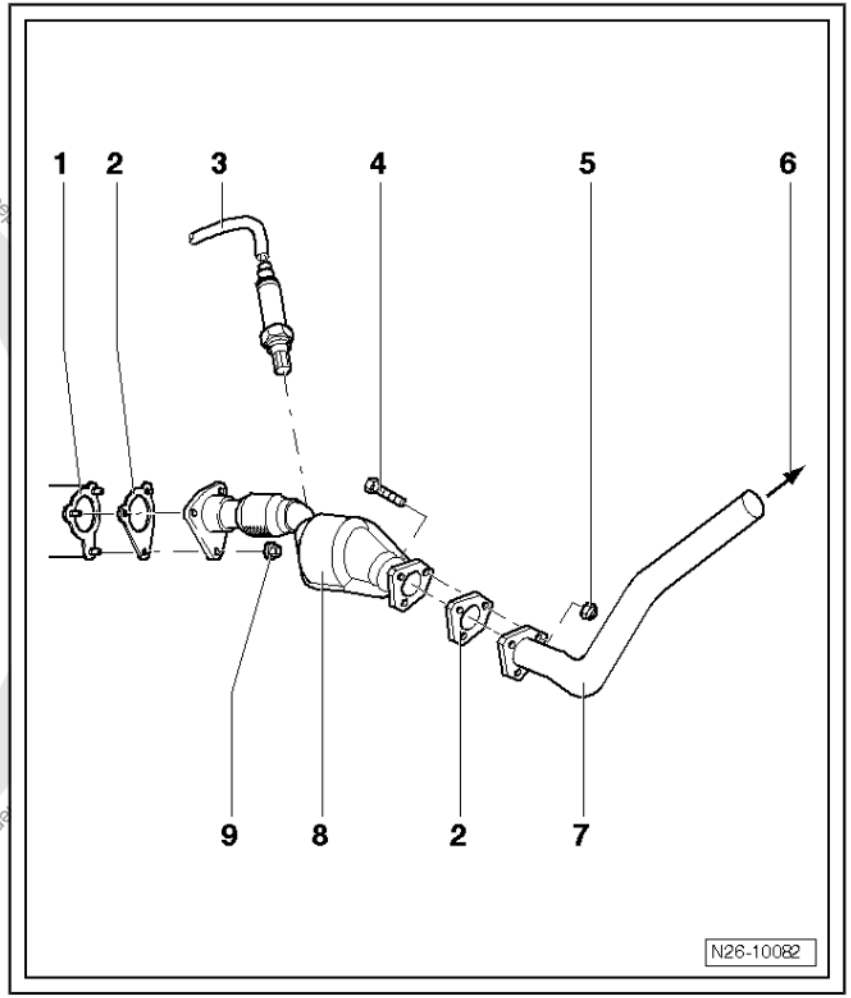

Protected by copyright. Copying for private or commercial purposes, in part or in whole, is not permitted unless authorised by Volkswagen AG. Volkswagen AG does not guarantee or accept any liability with respect to the correctness of information in this document. Copyright by Volkswagen AG.

1.6 Cooling Fans and Pumps Overview

6 - Engine Coolant Level (ECL) Sensor -G32-

15 - Coolant Fan 2 -V177-

15 - Coolant fan -V7- , BDP

15 - Coolant Fan Control (FC) Control Module -J293- , BDP

17 - Coolant Fan -V7- and Coolant Fan Control (FC) Control Module -J293-

17 - Coolant Fan 2 -V177- , BDP

17 - Coolant fan control module 2 -J671- , BDP

20 - Engine Coolant Temperature (ECT) Sensor (on Radiator) -G83-

- On BDP -G83- is located in the upper hose

20 - Coolant fan control thermal switch -F18-

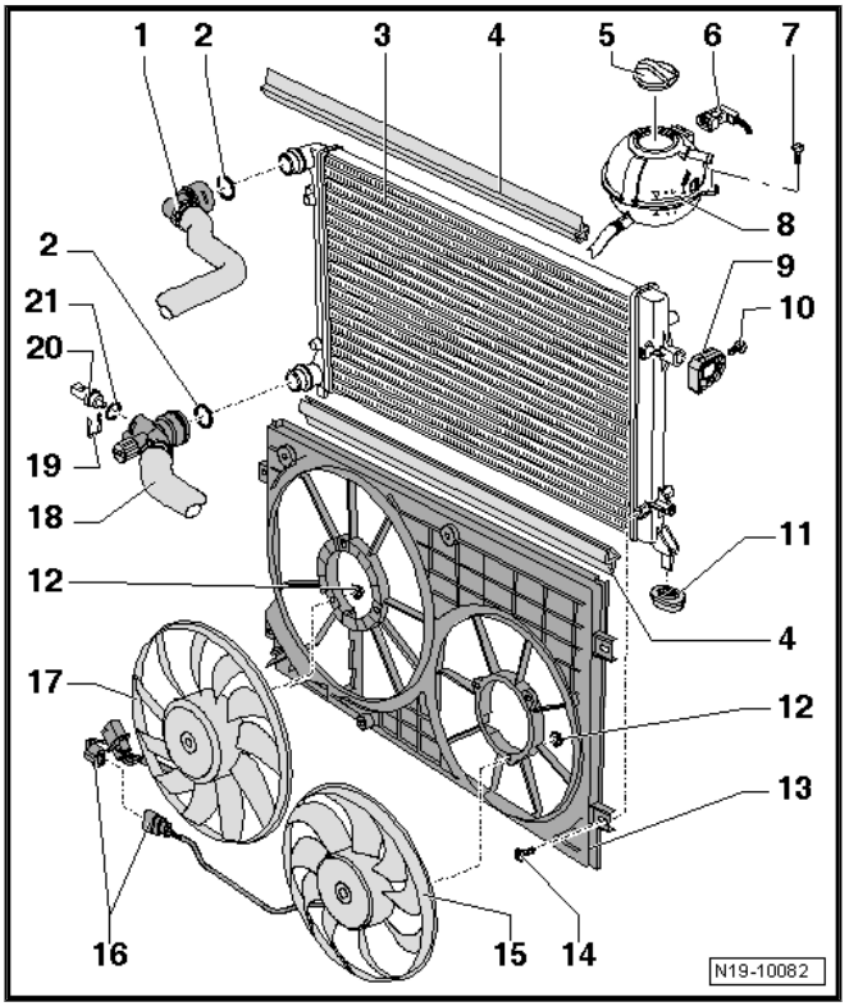

Protected by copyright. Copying for private or commercial purposes, in part or in whole, is not permitted unless authorised by Volkswagen AG. Volkswagen AG does not guarantee or accept any liability with respect to the correctness of information in this document. Copyright by Volkswagen AG.

1.6.1 After-Run Coolant Pump

Arrow - After-run coolant pump -V51- , 2.8L shown.

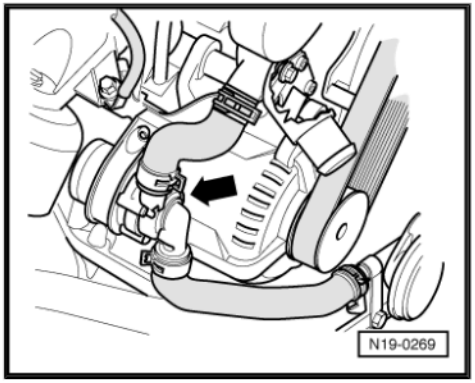

1.7 EVAP System

Protected by copyright. Copying for private or commercial purposes, in part or in whole, is not permitted unless authorised by Volkswagen AG. Volkswagen AG does not guarantee or accept any liability with respect to the correctness of information in this document. Copyright by Volkswagen AG.

4 - Leak detection pump -V144-

- In left rear wheel housing behind wheel housing liner

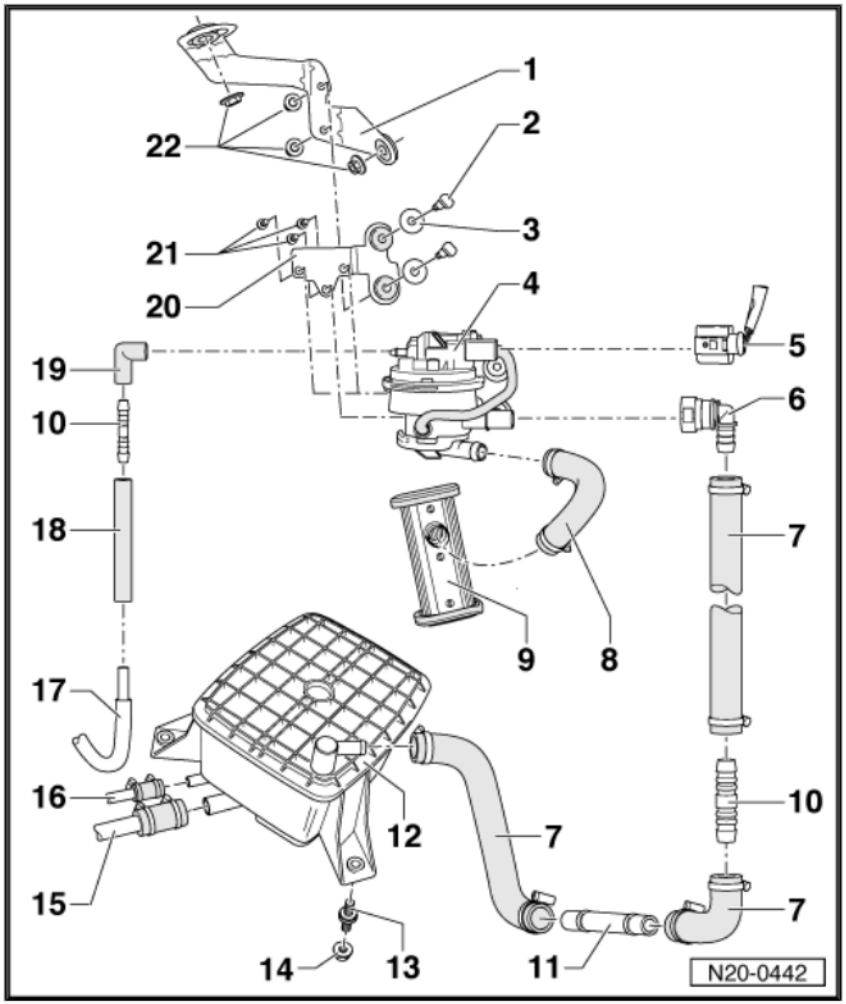

Protected by copyright. Copying for private or commercial purposes, in part or in whole, is not permitted unless authorised by Volkswagen AG. Volkswagen AG does not guarantee or accept any liability with respect to the correctness of information in this document. Copyright by Volkswagen AG.

1.8 Fuel Pump and Sensors Overview

Note

Fuel pump control module -J538- is not shown in this view. It is located under the spare tire in the trunk under a foam housing

⇒ "1.8.1 Fuel Tank Overview, with AWD", page 33

♦ ⇒ “1.8.2 Fuel Tank Overview, with FWD ”, page 34

1.8.1 Fuel Tank Overview, with AWD

1 - Transfer fuel pump -G6- , Connector

4 - Fuel level sensor -G-

17 - Fuel level sensor 3 -G237-

26 - Fuel level sensor 2 -G169-

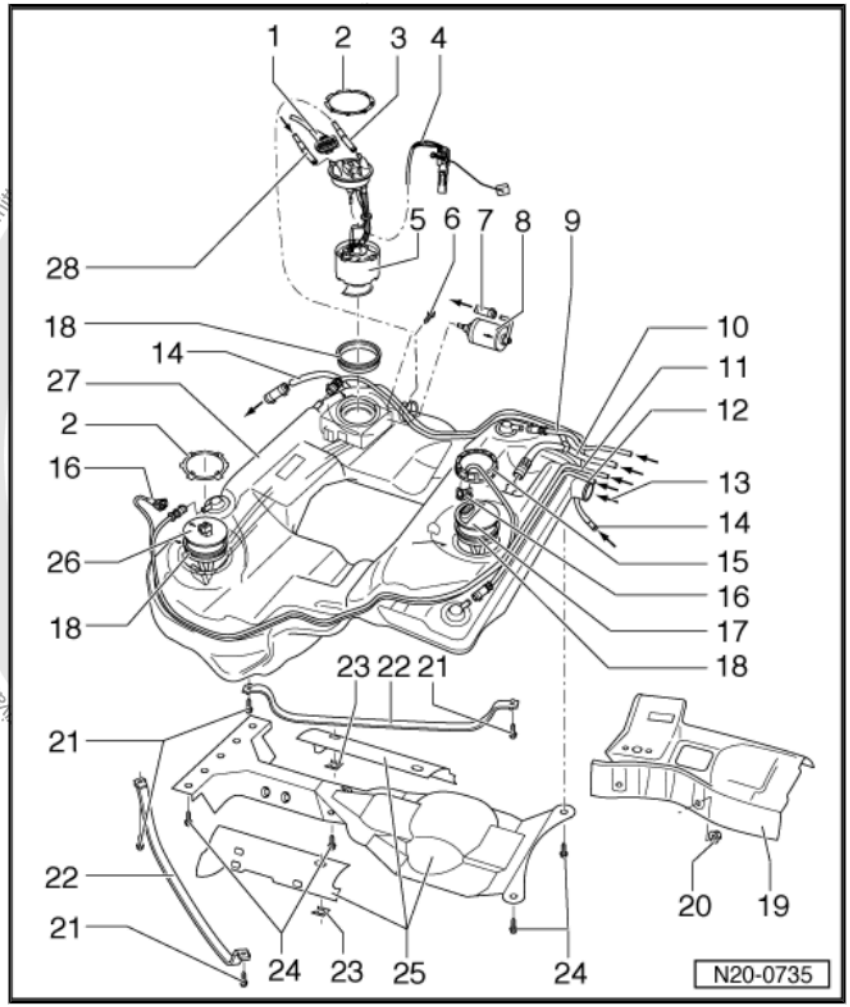

vate or commercial purposes, in part or in whole, is not permit

1.8.2 Fuel Tank Overview, with FWD

14 - Transfer fuel pump -G6- , Connector

16 - Fuel level sensor -G-

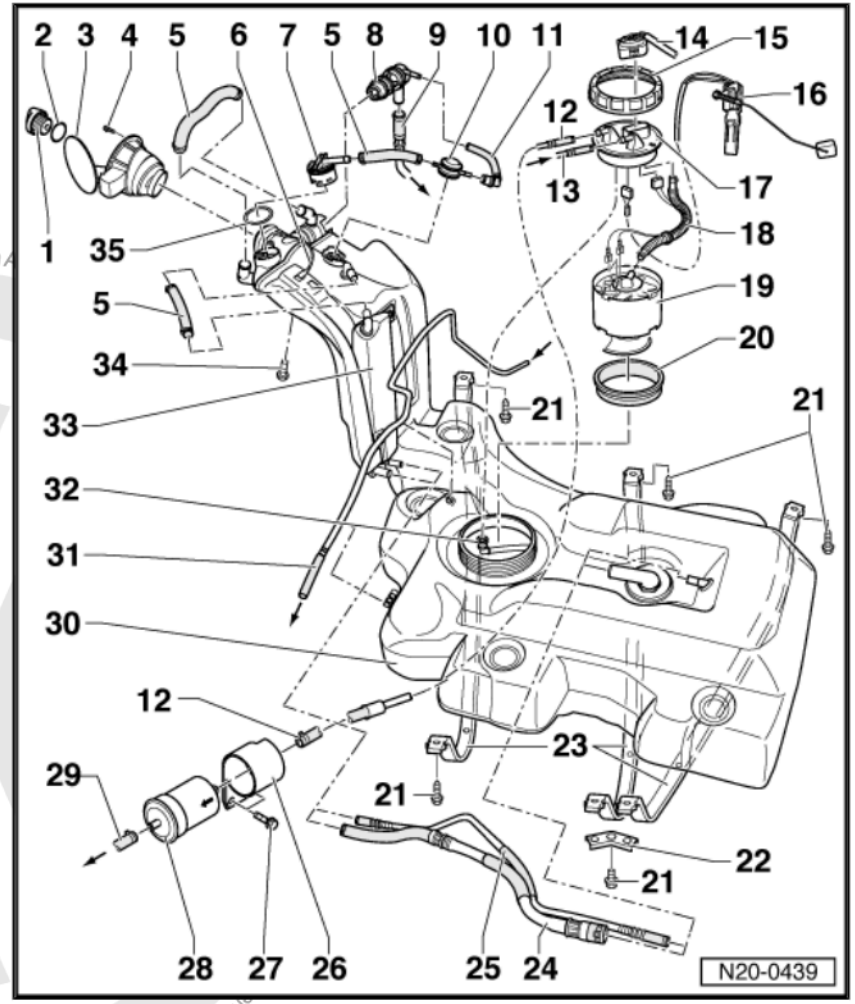

Protected by copyright. Copying for private or commercial purposes, in part or in whole, is not permitted unless authorised by Volkswagen AG. Volkswagen AG. Copyright by Volkswagen AG.

1.9 Accelerator Pedal Module Overview

4 - Throttle Position (TP) Sensor -G79-

4 - Accelerator Pedal Position Sensor 2 -G185-

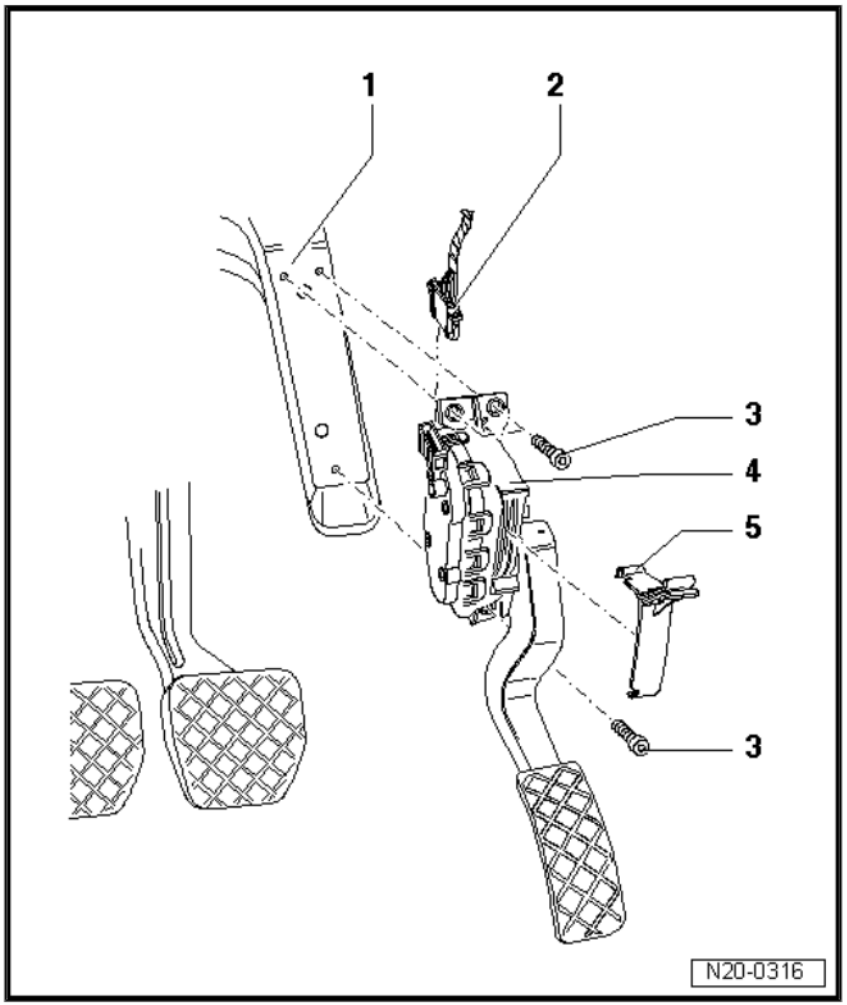

Protected by copyright. Copying for private or commercial purposes, in part or in whole, is not permitted unless authorised by Volkswagen AG. Volkswagen AG does not guarantee or accept any liability with respect to the correctness of information in this document. Copyright by Volkswagen AG.